| EU Reg nº 003469376 | EU Reg nº 003469376 |
| --- | --- |
| www.blink.com.pt | www.blink.com.pt |

# Instructions SONG

The installation must be done by a qualified electrician who follows these instructions scrupulously.
Only qualified personnel should perform maintenance operations on the product.
Ensure the rated voltage of the device is compatible with the power supply voltage.
Use a supply cable in conformity with the requirements of the low voltage installations standards.
The product should not be altered. Any alteration can make the product hazardous and voids the guarantee.

## I. Specifications

| | |
| --- | --- |
| Power Sourcing | 220-240 V/AC |
| Class | II |
| Power Frequency | 50/60Hz |
| IP | IP44 |
| Max. Watts | 24W |
| Colour temperature | 4200K |
| Mounting | Wall/Ceiling surface |
| Application | Indoor/Outdoor |

## II. Technical Drawing

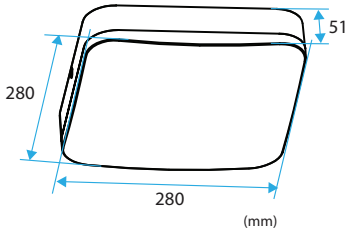


## III. Installation

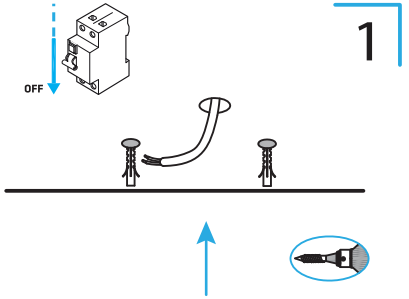


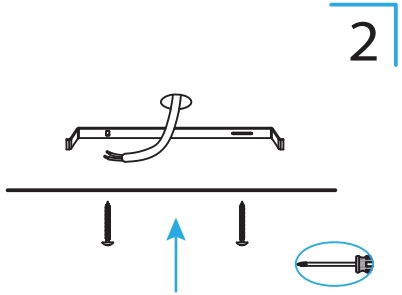


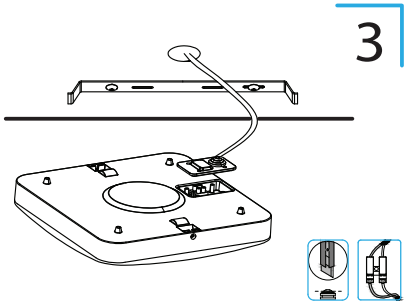


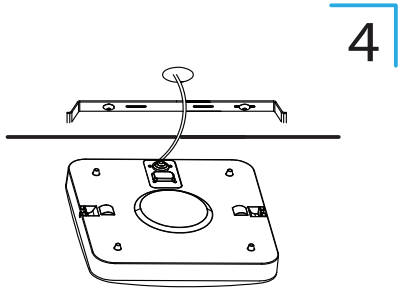


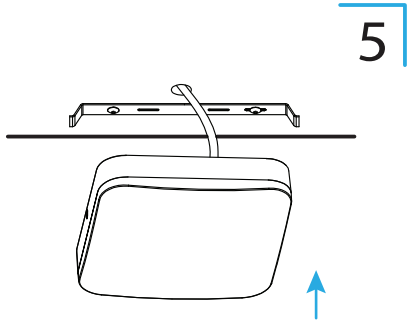


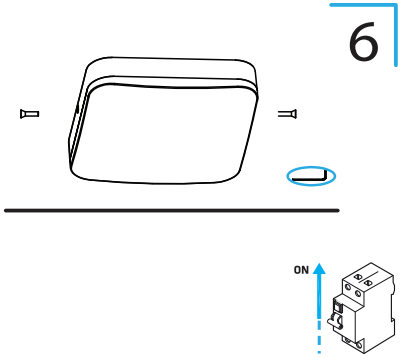


All responsibilities for defects or damages are hereby rejected if caused by: incorrect assembling of the product, incorrect supply, use of lamps not suitable for this product, external agents. BL/35 V1.1 EN

All responsibilities for defects or damages are hereby rejected if caused by: incorrect assembling of the product, incorrect supply, use of lamps not suitable for this product, external agents. BL/35 V1.1 EN